Design and Evaluation of a DC-DC Converter for Voltage Stabilisation in Battery Powered Robotic Subsystems

Interim Report.

Fortune Olose

Final Year Project
B.E. in Electronic & Computer Engineering

INTERIM REPORT

An Interim Project Report submitted in partial fulfilment of the requirements of the Maynooth University for the degree of Batchelor of Engineering

05/12/2025

Supervisor: Dr. Bob Lawlor

Design, Simulate, Test and Build a DC-DC Boost Converter for Battery Powered Robotic Subsystems.

Declaration

I declare that this interim report and the project it describes are exclusively my own work, except where specifically noted. I confirm that I have appropriately cited all information derived from the published and unpublished work of others.

I declare that this report and the project it describes is my original work only. I have not plagiarized or excessively quoted the work of others, nor have I colluded with others to represent collaborative work as my own. I confirm that I have appropriately cited all information derived from the published and unpublished work of others.

Signed: *Student Number:* *Date:*

Design, Simulate, Test and Build a DC-DC Boost Converter for Battery Powered Robotic Subsystems.

Abstract

Battery-powered robotic systems rely on a range of subsystems, including sensors, embedded microcontrollers & communication modules – that require a stable and tightly regulated voltage supply to operate reliably. However, the voltage available at the battery terminals can fluctuate significantly due to discharge characteristics, varying load conditions, and the inherently dynamic nature of motor-driven locomotion. These variations can lead to performance degradation, sensor noise, computational instability, or unexpected subsystem resets. To address this challenge, this project investigates the design, simulation, and evaluation of a PCB DC-DC boost converter implementation capable of providing a regulated 12V supply rail for robotic subsystems from a fluctuating battery input voltage in the range of 8-11 V.

The work involves selecting an appropriate boost converter topology, performing analytical component sizing, and modelling the converter's behaviour in LTspice and MATLAB to examine voltage regulation, transient behaviour, efficiency, and ripple characteristics. A custom PCB implementation will then be fabricated to validate the converter's performance under controlled input variation and load conditions. The results aim to demonstrate the converter's effectiveness and a power-conditioning stage that stabilizes subsystem voltage in the presence of realistic battery fluctuations, thereby improving overall robotic subsystem reliability. This prototype serves as a foundational building block for robust power management in autonomous robotic platforms.

Design, Simulate, Test and Build a DC-DC Boost Converter for Battery Powered Robotic Subsystems.

Table of Contents

Declaration.....2

Abstract.....3

1 Introduction.....5

2. Technical Background.....5

3. Project Approach.....6

4. Evaluation Strategy.....9r

5. Ethics, Safety and Societal Considerations:.....11

1 Introduction

Battery-powered robotic subsystems are inherently subject to supply-voltage variation arising from the interaction between dynamic load demands and the non-ideal electrical characteristics of lithium-based energy sources. While battery discharge behaviour and internal resistance contribute to long-term voltage variation, the primary source of short-timescale voltage fluctuation in mobile robots is the load itself, particularly during rapid changes in current demand caused by actuation, computation, or communication events. The battery acts as the medium through which this variability propagates to the system power bus. A commonly used Thevenin-equivalent battery model expresses the instantaneous bus voltage as:

$$V_{bus} = V_{oc} - I_{load} R_{int} \qquad (SE$$

But for robotics it helps to extends it to a dynamic model (commonly 1RC/2RC):

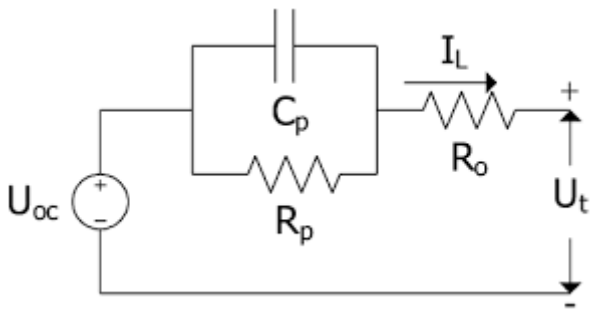

Figure 1: Thevenin equivalent battery representation of lithium-ion DC batteries.

$$V_{bus}(t) = V_{oc}(SoC) - I_{load}(t)R_0 - \sum_k V_{p,k}(t), \qquad (2)$$

$$V_{p,k}(t) = -\frac{1}{R_k C_k} V_{p,k}(t) + \frac{1}{C_K} I_{load}(t) \qquad (3)$$

Here R_0 captures the instantaneous ohmic drop, while the $R_k C_K$ terms capture polarization/diffusion dynamics that make the sag history-dependent during aggressive duty cycles (start-stop locomotion, manipulation bursts). Reviews of lithium-ion equivalent-circuit parameter estimation discuss how exactly these R and RC elements and how they vary with operating conditions. [1]

Design, Simulate, Test and Build a DC-DC Boost Converter for Battery Powered Robotic Subsystems.

Robotic loads are spiky: motors, radios, compute boards, and camera subsystems can demand fast current steps. The bus droop during a step is not only resistive; it also includes PDN inductance and capacitor ESR/finite capacitance. With this insight, we can make the claim that "the load dominates variability" using $\frac{di}{dt}$, and the power distribution network (PDN).

$$\Delta V_{bus}(t) = \Delta I R_{eq} + L_{eq}\frac{dI}{dt} + \frac{1}{C_{eq}}\int \Delta I dt \qquad (SE$$

(SEQ

In converter topology design for robotic subsystems, the principal source of variability is the load rather than the battery itself. While the battery exhibits slow voltage variation due to discharge characteristics and aging, rapid fluctuations in bus voltage arise predominantly from transient load currents associated with motors, processors, and communication hardware. The battery's internal resistance acts as a transmission mechanism through which load-induced current steps manifest as voltage sag. Consequently, a DC-DC boost converter is designed primarily to reject load-driven disturbances, maintain regulation during sudden transients, and isolate sensitive subsystems from upstream source impedance. [2]

2. Technical Background

In a battery-powered robotic platform, the subsystem supply cannot be treated as an ideal DC source because the bus voltage varies with state of charge and, more critically, with fast load transients that pull current through the battery's non-zero internal resistance. Switching-mode DC–DC conversion is therefore used to "condition" this variable DC input into a regulated rail, exploiting the fact that a PWM converter's semiconductor devices operate predominantly as switches (low loss compared to linear regulation) while the inductor and capacitor store/transfer energy over each switching period. In a boost converter, regulation is achieved by controlling duty ratio $D$of the switch: during the ON interval $0 < t \leq DT$, the inductor is placed directly across the source so $v_L = V_{in}$. During the OFF interval $DT < t \leq T$, the diode conducts and the inductor sees $v_L = V_{in} - V_{out}$. Therefore, enforcing $\{v_L\} = 0$, over one period T gives:

$$DV_{in} + (1 - D)(V_{in} - V_{out}) = 0 \qquad (SEQ$$

Which simplifies to the canonical CCM boost relation:

$$\frac{V_{out}}{V_{in}} = \frac{1}{1 - D} \qquad (SEQ$$

This derivation is the basis for using the duty cycle as the control "knob" for regulation in PWM boost converters.

$$V_{out} = \frac{V_{in}}{1 - D}$$

$$D = 1 - \frac{V_{in}}{V_{out}}$$

From our specified operating window $V_{in} \in [8,\ 11]\ V,\ we\ substitute\ these\ values\ into\ our$ endpoints, $D(11V) = 1 - \frac{11}{12} = 0.083$ and $D(8V) = 1 - \frac{8}{12} = 0.333$. Hence, even before introducing non-idealities, the converter must remain stable and controllable across approximately D ∈ [0. 08. 0. 33], establishing the fundamental control authority the PWM loop must provide.

These fundamentals motivate the engineering constraints that appear later in the project specification. The converter must enforce a regulation requirement of the form $V_{out}(t) = 12V$ despite simultaneous disturbances in (i) $V_{in}(t)$ caused by battery internal resistance and discharge state, and (ii) subsystem load current $I_{load}(t)$ caused by computational, sensing, and communication transients. Achieving this in practice requires selecting passive and active components so that energy storage and filtering are sufficient at the switching frequency $f_{sw.}$ For example, the inductor value is chosen to limit inductor ripple current Δi_L using the ON-slope relationship:

$$\Delta i_L = \frac{V_{in}}{L} DT = \frac{V_{in} D}{L f_{sw}}, \qquad (SEQ$$

The CCM/DCM boundary is reached when i_L just touches zero, just about:

$$I_{L,B} = \Delta i_L / 2 \qquad (SEQ$$

which combined with our previous derivation, yields a practical CCM design inequality (evaluated at the worst-case V_{in} and minimum I_{out})

$$L \geq \frac{V_{in} D}{2 f_{sw} I_{L,min}} \qquad (SEQ$$

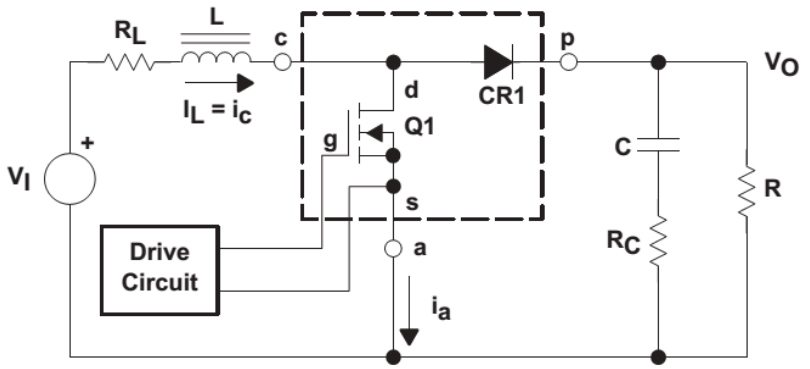

Figure 2: DC-DC Boost converter with a PWM clock attached to converter switch.

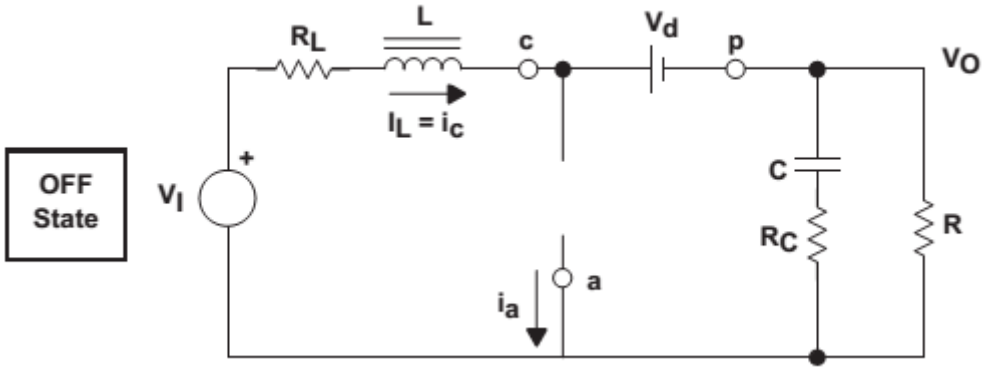

Figure 3: DC-DC Boost converter activity when the switch is turned OFF.

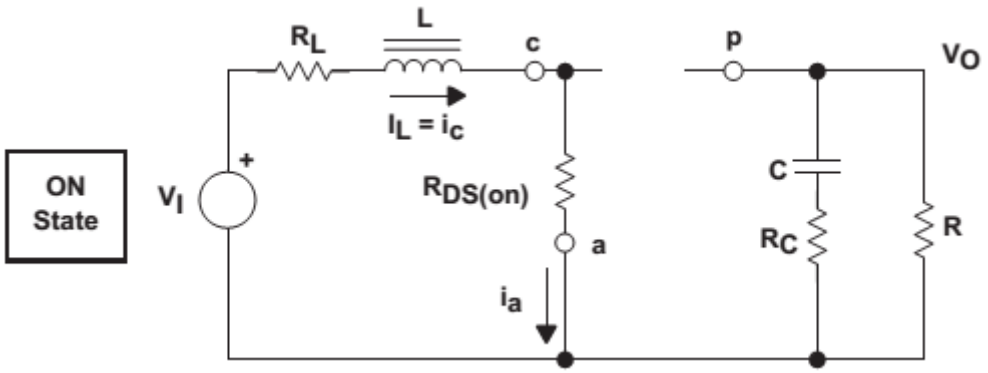

Figure 4: DC-DC Boost Converter activity when the switch is turned ON.

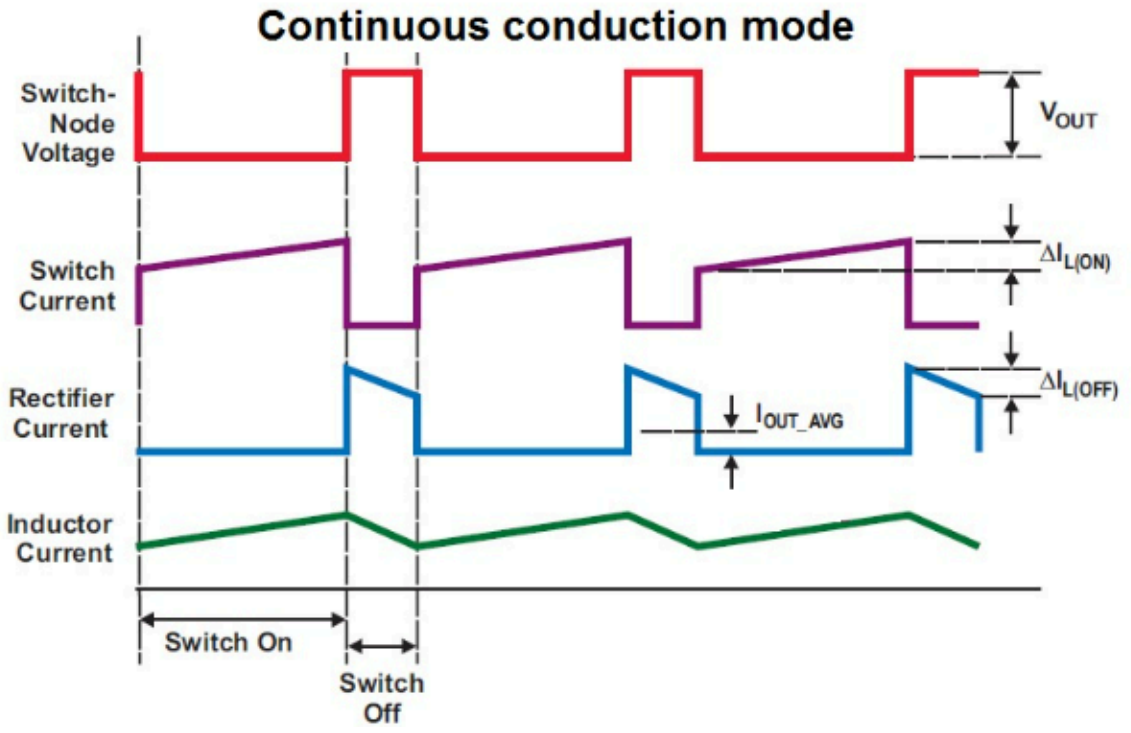

Figure 5: Inductor's activity under CCM mode.

The output capacitor is chosen to constrain output ripple by relating capacitor change variation to the load/switching intervals (i.e., charge balance). These sizing relations connect directly to measurable performance metrics (ripple, transient drop/overshoot, and efficiency) used later in the evaluation strategy.

3. Project Approach

The project begins with an extensive review of the theoretical principles that govern DC-DC boost conversion, battery behaviour, and power conditioning in robotic systems. Literature on switching converters establish that the boost topology operates by storing energy in an inductor during the switch-on interval and releasing it to the load when the switch opens, producing an output voltage higher than the input. This behaviour is governed by the steady state converter equation.

$$V_{out} = \frac{V_{in}}{1 - D} \qquad (SEQ$$

Where D is the duty cycle of the switching signal. Battery analysis is incorporated using the standard internal-resistance model.

$$V_{out} = V_{oc} - I_{load} R_{int} \qquad (SEQ$$

Demonstrating mathematically how robotic subsystems experience voltage sag under dynamic loads. This literature-driven foundation ensures that the subsequent design stages adhere to established power-electronics principles and reflect realistic operating conditions found in robotics research.

Using the theoretical relationships above, the project proceeds to analytically determine suitable component values for the inductor, output capacitor, input capacitor, diode and power MOSFET. The inductor value L is selected by constraining the peak-to-peak inductor current ripple Δi_L according to:

$$L = \frac{V_{in} D}{\Delta i_L f_{sw}} \qquad (SEQ$$

where f_{sw} is the switching frequency. Riffling through design literature reveals that typical ripple targets are 20 – 40% of the inductor's average current, balancing dynamic performance with inductor size. The output capacitor C_{out} is sized using:

$$C = \frac{I_{out} D}{\Delta V_{out} f_{sw}} \qquad (SEQ$$

ensuring that voltage ripple remains within the tolerance required by sensitive robotic electronics, typically less than 50-100mV for camera modules or embedded compute boards. This analytical phase couples mathematical modelling with engineering constraints to yield a viable baseline design.

The next stage of the approach focuses on characterising the relationship between the variable input voltage (8 – 11V) and the duty-cycle range required to maintain a regulated 12V output. Using the boost equation rearranged for D.

$$D = 1 - \frac{V_{in}}{V_{out}} \qquad (SEQ$$

The converter is shown to operate over

(SEQ

Design, Simulate, Test and Build a DC-DC Boost Converter for Battery Powered Robotic Subsystems.

Corresponding to input voltages of 11V and 8V respectively, MATLAB scripts are developed to compute how this duty-cycle range influences switching stress, average inductor current, and peak current. Dynamic equations for this inductor current.

$(SEQ$

Are used to study the converter's transient behaviour, specifically how it responds to rapid changes in load current that are typical in robotic subsystems such as processors or communication radios.

Following analytical design, the converter is implemented in LTspice to evaluate steady state and transient performance. The SPICE simulations incorporate non-ideal metrics such as MOSFET on-resistance, diode forward-voltage drop, capacitor ESR and inductor series R_L. These losses are used to estimate converter efficiency via:

$$\gamma = \frac{P_{out}}{P_{in}} = \frac{V_{out} I_{out}}{V_{in} I_{in}} \qquad (SE($$

Line regulation is simulated by sweeping V_{in} from 8V to 11V and observing deviation of V_{out} from 12V. Load regulation is tested by stepping I_{load} from light load to full load, observing the converter's ability to maintain steady output with minimal voltage drop. Transient analysis evaluates switching node behaviour, peak currents, inductor saturation margin, and output ripple, all of which inform the eventual component sections and PCB layout requirements.

Once the simulated power stage meets design expectations, attention is shifted to selecting a suitable control strategy and boost converter IC. Current-mode control, widely documented in converter literature for it's robustness and fast transient response, is evaluated for applicability. For such controllers, the small-signal duty-cycle-to-output transfer function

$(SEQ$

is analysed to understand system stability and compensation requirements. While full-loop compensation design may exceed the scope of a final-year project, understanding the structure of the control loop ensures that the chosen IC operates correctly within its intended conditions.

The final stages of the project involve schematic capture and PCB layout following best practices from switching -converter literature, including minimizing the high $\frac{di}{dt}$ loop, isolating the switching node, providing Kelvin-sense routing for the current-sense resistor, and placing decoupling capacitors as close to the MOSFET and diode. A prototype board is fabricated and tested using a variable bench supply to emulate battery voltage fluctuations. Measurements of

output ripple, line regulation, load regulation, transient response, and efficiency validate the analytical and simulation models. Experimental results are compared against LTspice and MATLAB predictions, enabling discussions of discrepancies, parasitic effects, and practical constraints. Through this combined analytical, simulation, and experimental workflow, the project thoroughly evaluates the suitability of the designed boost converter as a voltage-stabilisation module for battery-powered robotic subsystems.

4. Evaluation Strategy

The performance of the designed DC-DC boost converter will be evaluated through a combination of steady-state, dynamic, efficiency, and thermal analysis. These evaluation metrics are selected to reflect the converter's intended role as a voltage-stabilization stage for battery powered robotic subsystems, where reliability under fluctuating input voltage and load conditions is critical. Both simulation-based and experimental measurements will be used, enabling comparison between theoretical predictions, LTspice results, and physical prototype behaviour.

Line regulation assesses the converter's ability to maintain a constant output voltage V_{out} as the input voltage V_{in} varies across the specified battery range of 8-11V. This is quantified as:

$$Line\ regulation = \frac{\Delta V_{out}}{\Delta V_{in}} \qquad (SEQ$$

And is evaluated by sweeping the input voltage while holding the load current constant. Load regulation, by contrast, examines the sensitivity of the output voltage to changes in the load current I_{out}, defined as:

$$Load\ regulation = \frac{V_{out,\,no\ load} - V_{out,\,full\ load}}{V_{out,\,nominal}} \qquad (SEQ$$

These metrics are especially important in robotic systems, where subsystem current demand can change abruptly due to sensor activation or processor workload. Successful regulation is indicated by minimal deviation of V_{out} from its nominal 12V value under both input and load variation.

Inductor current ripple is evaluated to confirm continuous conduction mode (CCM) operation and to validate the analytical design equations used component selection. For a boost converter operating in CCM, the peak-to-peak inductor current ripple is given by:

$$\Delta i_L = \frac{V_{in} D}{L f_{sw}} \qquad (SE$$

Where D is the duty cycle, L is the inductance, and f_{sw} is the switching frequency. Simulation waveforms and oscilloscope measurements are used to confirm that the inductor current never reaches zero, ensuring CCM operation across the intended operating range. Maintaining CCM is important because it results in predictable voltage transfer characteristics and reduced current stress compared to discontinuous conduction mode (DCM). The measured ripple current is also used to estimate copper loses via:

$$P_{cu} = I_{rms}^2 R_L \qquad (SE$$

Where R_L is the inductor's series resistance, linking ripple behaviour directly to efficiency and thermal performance.

Output voltage ripple is evaluated to ensure compatibility with sensitive compatibility with sensitive robotic electronics. Ripple arises due to the periodic charging and discharging of the output capacitor and can be approximated as:

$$\Delta V_{out,pp} = \frac{I_{out} D}{C_{out} f_{sw}} + I_{ripple} R_{ESR} \qquad (SE$$

Where C_{out} is the output capacitance and R_{ESR} is the capacitor's equivalent series resistance. Excessive ripple can introduce noise into sensor readings, disrupt communication systems, or reduce ADC accuracy. Ripple measurements in simulation and hardware are compared against theoretical predictions to validate capacitor sizing and ESR assumptions used in the design phase.

Transient performance is evaluated by subjecting the converter to step changes in load current and sudden reductions in input voltage, simulating real robotic events such as processor wake-up or battery-sag during actuator engagement. The dynamic behaviour of the output voltage is analysed using the converter's small-signal control-to-output transfer function $G_{vd}(s)$, with key performance indicators including voltage undershoot, overshoot, and settling time. The output capacitor dynamics can be approximated by:

$$\Delta V_{out}(t) = \frac{\Delta I_{load}}{C_{out}} \int dt \qquad (SE$$

Highlighting the role of capacitance in limiting transient voltage deviation. Fast recovery and minimal deviation indicate effective energy by the power stage and suitability for robotic subsystem supply.

Converter efficiency is measured across a range of input voltages and load currents to assess overall energy performance. Efficiency trends are analysed in relation to conduction issues, switching losses, and ripple-induced RMS current increases. Higher inductor ripple leads to increased RMS current and therefore higher conduction losses, reinforcing the design trade-off between inductance size and efficiency. Efficiency plots generated from LTspice and experimental data provide insight into optimal operating regions for the converter.

Thermal behaviour is assessed to ensure safe operation under sustained load conditions. Component temperature rise is linked to power dissipation using:

$$\Delta T = P_{loss} \theta_{JA} \qquad (SE$$

where θ_{JA} is the junction-to-ambient thermal resistance. Measurements of MOSFET, diode, and inductor temperature are compared against estimated losses from conduction and switching models. Excessive temperature rise would indicate underestimated losses or inadequate thermal design, while stable temperatures confirm the converter's suitability for continuous operation in robotic environments.

Through combined regulation testing, ripple analysis, transient evaluation, efficiency measurement, and thermal assessment, the evaluation strategy provides a comprehensive framework for validating the designated boost converter. The integration of analytical equations, simulation results, and experimental measurements ensures that performance claims are physically justified and directly applicable to battery-powered robotic subsystems.

5. Ethics, Safety and Societal Considerations:

The design and implementation of power-electronic systems carry important ethical and safety responsibilities, particularly when applied to autonomous and robotic platforms. This project acknowledges these responsibilities by prioritising electrical safety, system reliability, and responsible engineering practice throughout the design and evaluation of the DC-DC boost converter.

Switch-mode power converters inherently operate with high $\frac{di}{dt}$ and $\frac{dv}{dt}$ switching transitions, which can lead to electromagnetic interference, component overstress, or unsafe fault conditions if improperly designed. This project addresses these risks through conservative component selection, appropriate voltage and current derating, and adherence to recommended PCB layout practices. Protection mechanisms such as current limiting and controlled start-up behaviour are considered to reduce the risk of catastrophic failure. Ensure stable voltage regulation for robotic subsystems also contributes to safety by preventing unpredictable system resets or control failures during operation.

From an ethical standpoint, the product avoids misleading claims regarding power amplification or performance beyond physical limits. The boost converter is explicitly positioned as a voltage-stabilisation device rather than a means of increasing mechanical or electrical power, aligning with fundamental energy conservation principles. Accurate modelling, transparent reporting of losses, and honest comparison between simulation and experimental results reflect ethical responsibility in engineering communication and documentation.

Reliable power management is a foundational requirement for safe and effective robotic systems used in areas such as healthcare, logistics, inspection, and environmental monitoring. By improving voltage stability and energy efficiency in battery-powered electronics, the project indirectly contributes to longer operational lifetimes and reduced energy waste. Efficient power conditioning reduces battery stress and extends service intervals, supporting sustainable system design. The knowledge and methodologies developed in this project therefore have broader social relevance, enabling safer, more reliable, and more energy efficient robotic technologies.